DocuSign Envelope ID: 867BF8B3-42B8-4031-AE84-18C4B520DD81

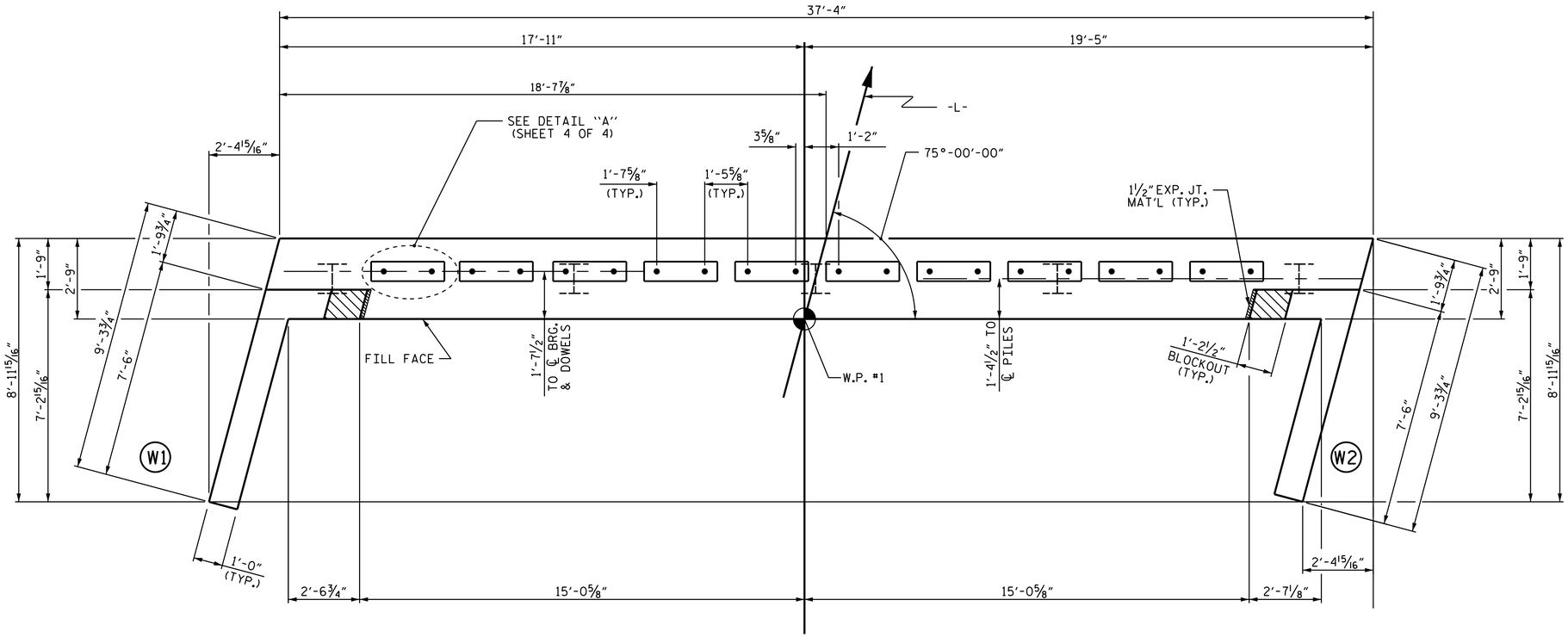

PLAN

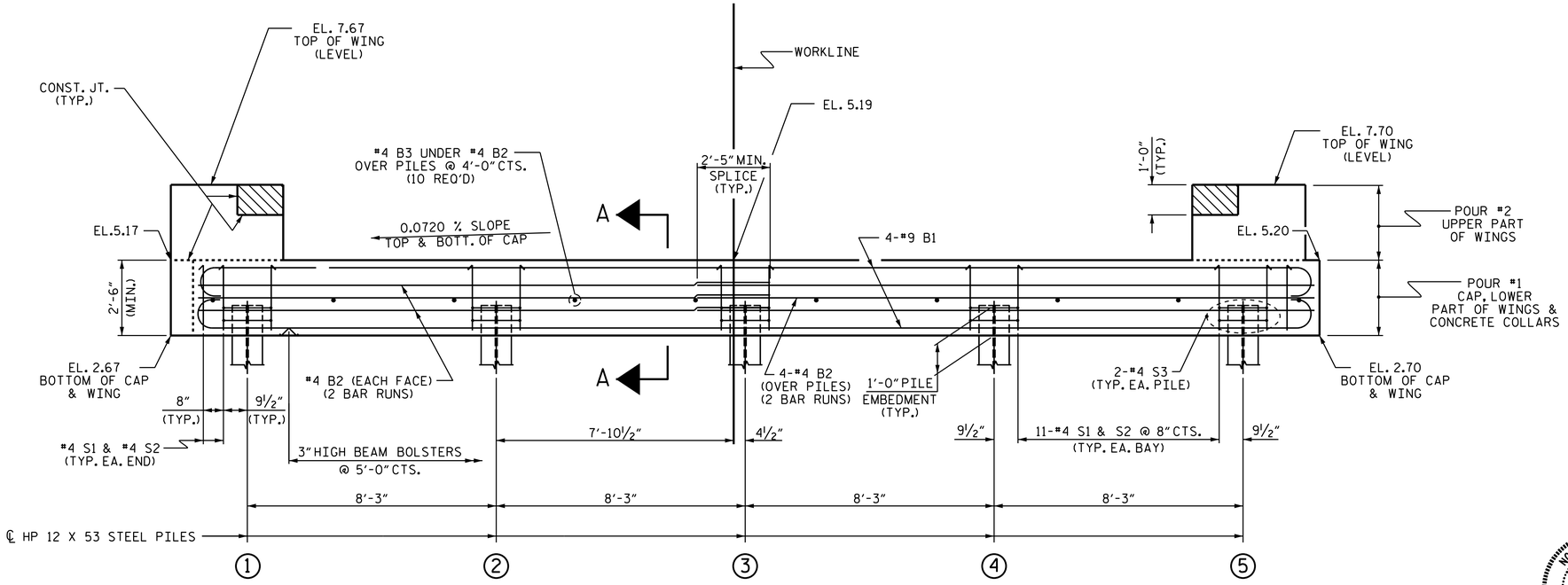

ELEVATION

WINGS NOT SHOWN FOR CLARITY.
FOR SECTION A-A, SEE SHEET 4 OF 4.
CONCRETE COLLARS FOR STEEL PILES NOT SHOWN IN PLAN AND ELEVATION VIEWS FOR CLARITY.
SEE "CORROSION PROTECTION FOR STEEL PILES DETAIL", SHEET 4 OF 4.

NOTES

STIRRUPS IN CAP MAY BE SHIFTED AS NECESSARY TO CLEAR DOWELS.

THE CONCRETE IN THE SHADED AREA OF THE WING SHALL BE POURED AFTER THE CONCRETE PARAPET IS CAST IF SLIP FORMING IS USED.

FOR PILE SPLICE DETAILS, SEE SHEET 4 OF 4.

FOR WING DETAILS, SEE SHEET 3 OF 4.

INSTALL THE 4" DIA DRAIN PIPE THROUGH THE WING WALL AS REQUIRED FOR REINFORCED BRIDGE APPROACH FILLS, SEE ROADWAY PLANS. REINFORCING STEEL IN THE WING WALL MAY BE SHIFTED AS NECESSARY TO CLEAR THE DRAIN PIPE.

TOP OF PILE ELEVATIONS	
1 THRU 5	3.70

PROJECT NO. 17BP.1.R.65
PASQUOTANK COUNTY
STATION: 13+96.00 -L-

SHEET 1 OF 4

STATE OF NORTH CAROLINA
DEPARTMENT OF TRANSPORTATION
RALEIGH

SUBSTRUCTURE

END BENT No. 1

NORTH CAROLINA PROFESSIONAL SEAL 14045 ENGINEER TIMOTHY L. COGGINS

REVISIONS						SHEET NO.
NO.	BY:	DATE:	NO.	BY:	DATE:	S-13
1			3			TOTAL SHEETS
2			4			20

ASSEMBLED BY : REZA KOUCHEKI DATE : 11/7/14
CHECKED BY : K.P. SEDAI DATE : 11/18/14
DRAWN BY : DGE 01/10
CHECKED BY : MKT 01/10

30-DEC-2014 10:51
S:\DPGI\Division1\17BP.1.R.65\Final Plans and Special Provisions\DigitSign Setup\400_000_17BP.1.R.65_SD_S0.dgn
tcoggins

STD. NO. EB_30_75S