DocuSign Envelope ID: 867BF8B3-42B8-4031-AE84-18C4B520DD81

NOTES :

FOR BERM WIDTH DIMENSIONS, SEE GENERAL DRAWING.

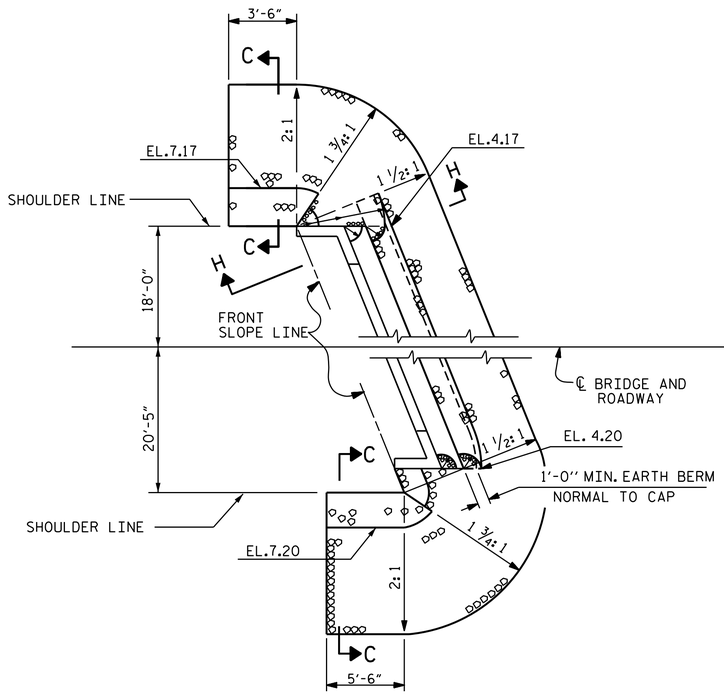

END BENT NO.1

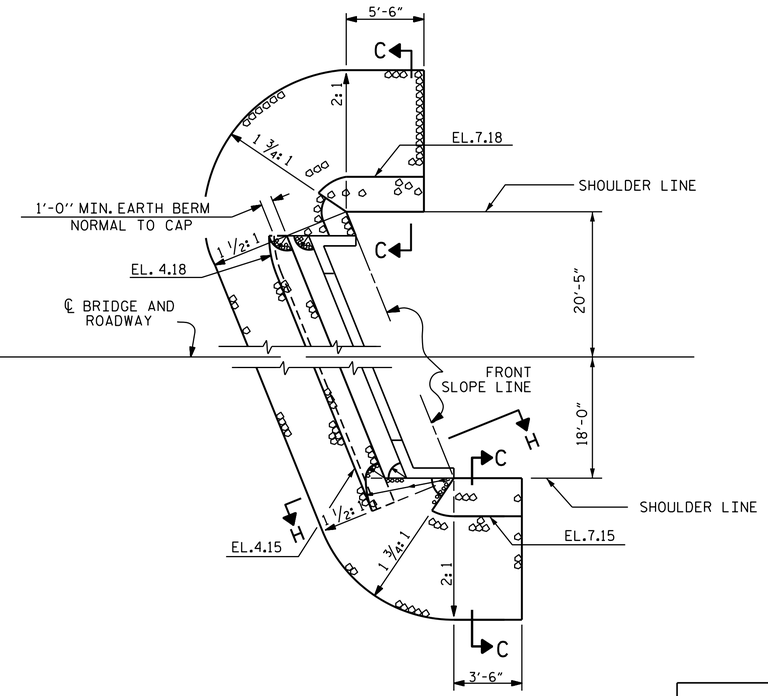

END BENT NO.2

ESTIMATED QUANTITIES		
BRIDGE @ STA. 13+96.00 -L-	RIP RAP CLASS II (2'-0" THICK)	GEOTEXTILE FOR DRAINAGE
	TONS	SQUARE YARDS
END BENT NO.1	81	91
END BENT NO.2	81	91

PLAN OF RIP RAP

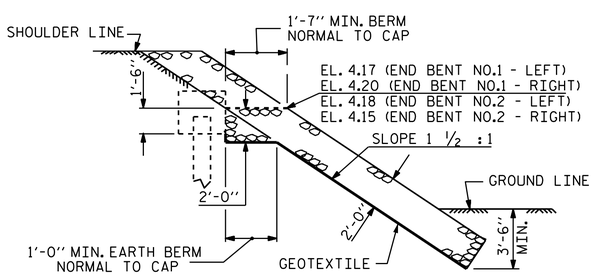

SECTION H-H

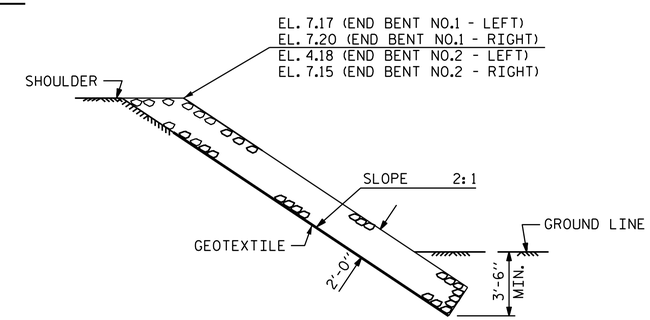

SECTION C-C

PROJECT NO. 17BP.1.R.65

PASQUOTANK COUNTY

STATION: 13+96.00 -L-

STATE OF NORTH CAROLINA
DEPARTMENT OF TRANSPORTATION
RALEIGH

STANDARD

RIP RAP DETAILS

NORTH CAROLINA PROFESSIONAL SEAL 14045 ENGINEER TIMOTHY L. COGGINS

REVISIONS							SHEET NO.
NO.	BY:	DATE:	NO.	BY:	DATE:		S-19
1			3				TOTAL SHEETS
2			4				20

ASSEMBLED BY : REZA KOUCHEKI DATE : 11/10/14
CHECKED BY : K.P. SEDAI DATE : 11/19/14

DRAWN BY : REK 1/84
CHECKED BY : RDU 1/84

REV. 5/1/06R TLA/GM
REV. 10/1/11 MAA/GM
REV. 12/21/11 MAA/GM

09-DEC-2014 12:32
S:\DPGI\Division1\17BP.1.R.65\FinalPlans and SpecialProvisions\DigitSign Setup\400_000_17BP.1.R.65_SD_S0.dgn
nruffin

STD. NO. RR1 (Sht 1)