DocuSign Envelope ID: 867BF8B3-42B8-4031-AE84-18C4B520DD81

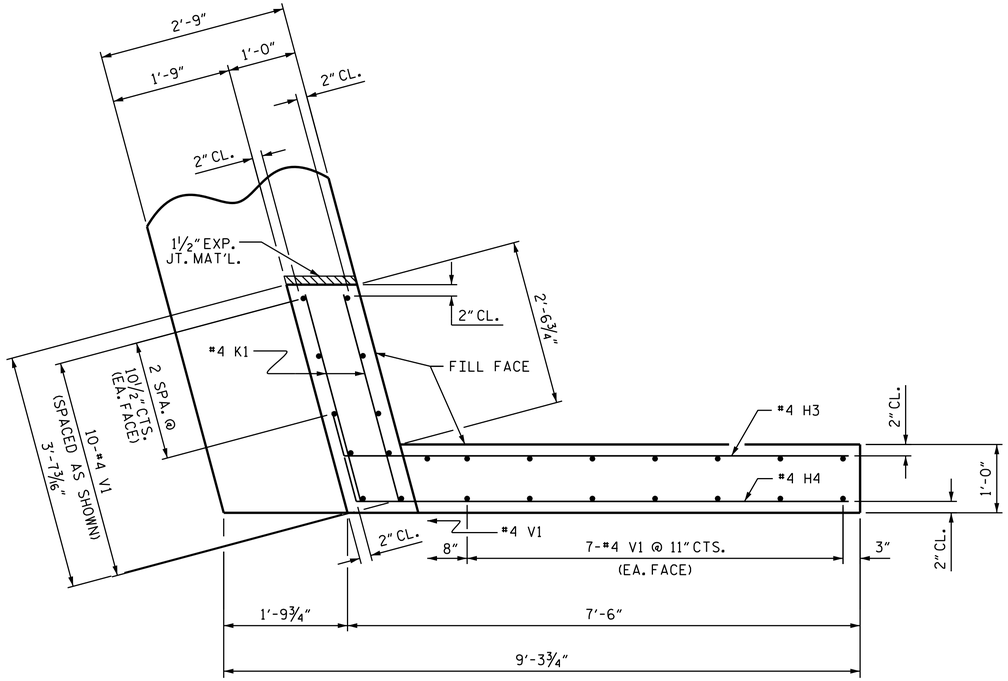

PLAN OF WING (W1)

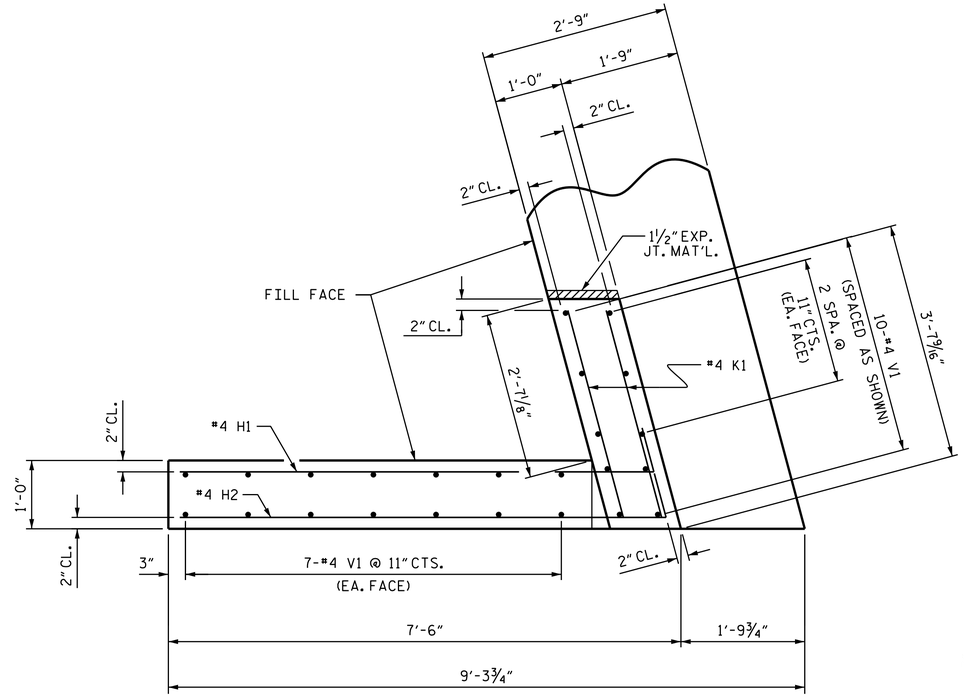

PLAN OF WING (W2)

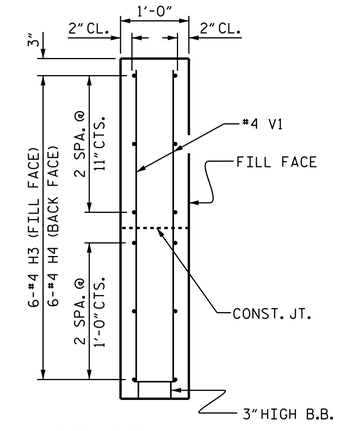

SECTION X-X

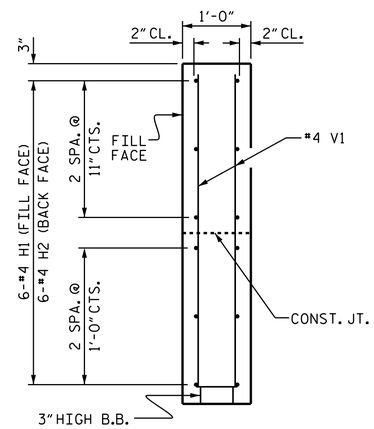

SECTION Y-Y

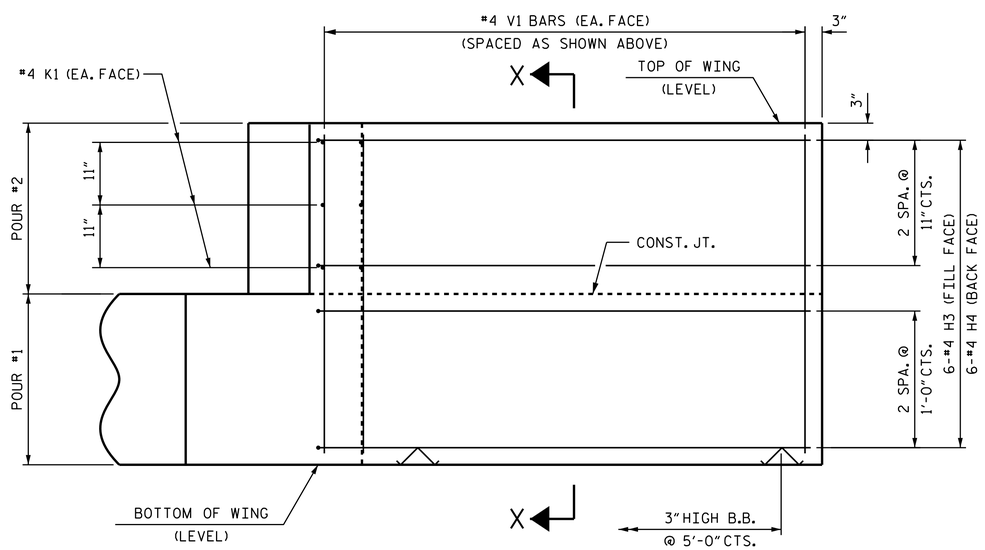

ELEVATION OF WING (W1)

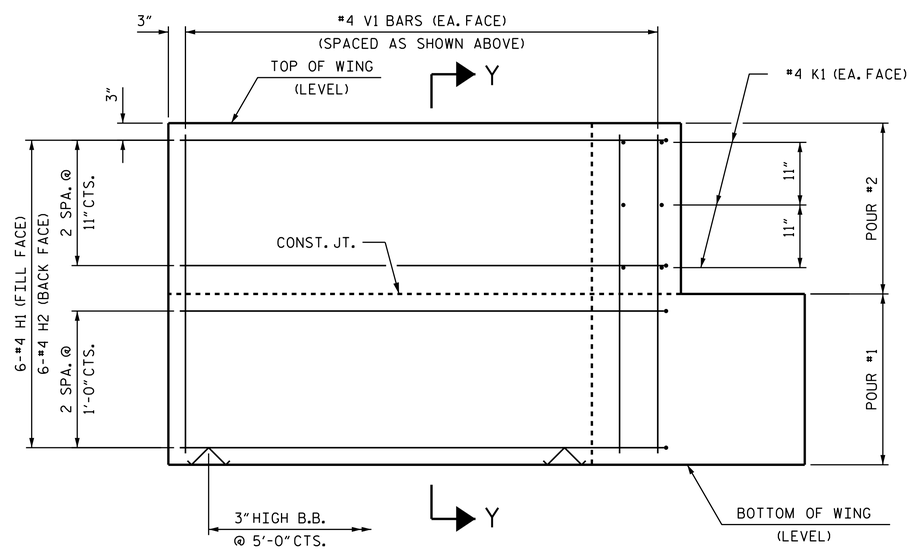

ELEVATION OF WING (W2)

WING DETAILS

NORTH CAROLINA PROFESSIONAL SEAL 14045 ENGINEER TIMOTHY L. COGGINS

PROJECT NO. 17BP.1.R.65
PASQUOTANK COUNTY
STATION: 13+96.00 -L-

SHEET 3 OF 4

STATE OF NORTH CAROLINA
DEPARTMENT OF TRANSPORTATION
RALEIGH

SUBSTRUCTURE
END BENT
WING DETAILS

REVISIONS						SHEET NO.
NO.	BY:	DATE:	NO.	BY:	DATE:	S-15
1			3			TOTAL SHEETS
2			4			20

ASSEMBLED BY : REZA KOUCHEKI DATE : 11/7/14
CHECKED BY : K.P. SEDAI DATE : 11/19/14
DRAWN BY : DGE 03/10
CHECKED BY : MKT 03/10

09-DEC-2014 12:32
S:\DPGI\Division1\17BP.1.R.65\Final Plans and Special Provisions\DigitSign Setup\400_000_17BP.1.R.65_SD_S0.dgn
nruffin

STD. NO. EB_30_75S