DocuSign Envelope ID: 867BF8B3-42B8-4031-AE84-18C4B520DD81

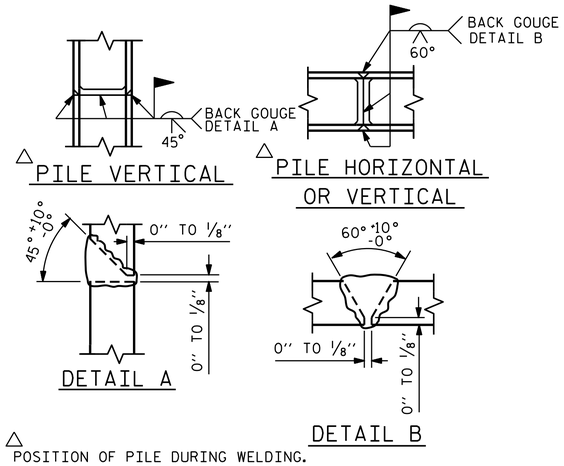

△ POSITION OF PILE DURING WELDING.

PILE SPLICE DETAILS

BAR TYPES

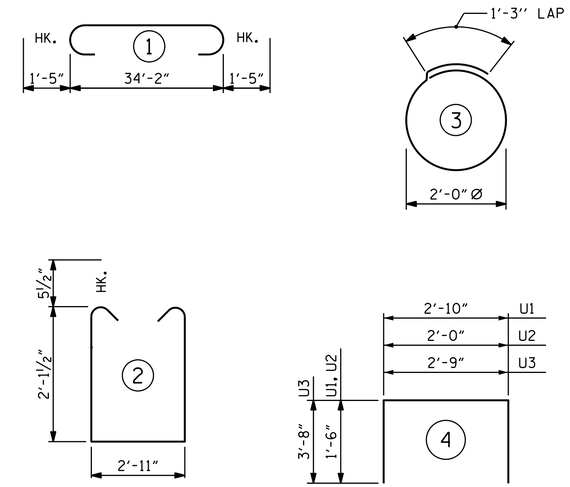

ALL BAR DIMENSIONS ARE OUT TO OUT.

BILL OF MATERIAL
FOR ONE BENT

BAR	NO.	SIZE	TYPE	LENGTH	WEIGHT
B1	4	#10	1	37'-0"	637
B2	4	#10	STR	34'-4"	591
B3	4	#5	STR	34'-4"	143
B4	8	#4	STR	18'-5"	98
B5	9	#4	STR	2'-11"	18
D1	40	#6	STR	1'-6"	90
S1	38	#5	2	8'-1"	320
S2	14	#4	3	7'-7"	71
U1	4	#4	4	5'-10"	16
U2	6	#4	4	5'-0"	20
U3	2	#9	4	10'-1"	69

REINFORCING STEEL (FOR ONE BENT) 2073 LBS

CLASS A CONCRETE BREAKDOWN (FOR ONE BENT)

TOTAL CLASS A CONCRETE 10.4 C.Y.

HP 14 X 73 GALVANIZED STEEL PILES (FOR ONE BENT)

No. 7 LIN. FT. 490

PILE REDRIVES 7 EA.

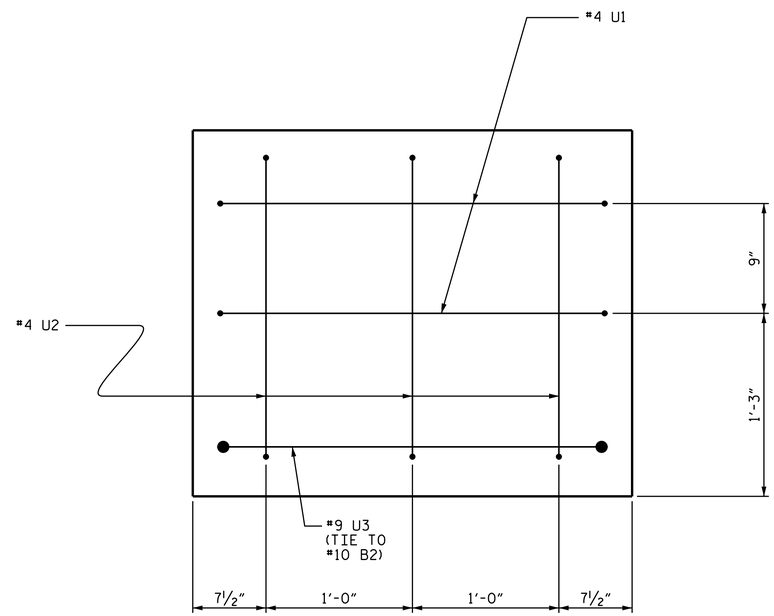

END OF CAP VIEW
(TYPICAL BOTH ENDS)

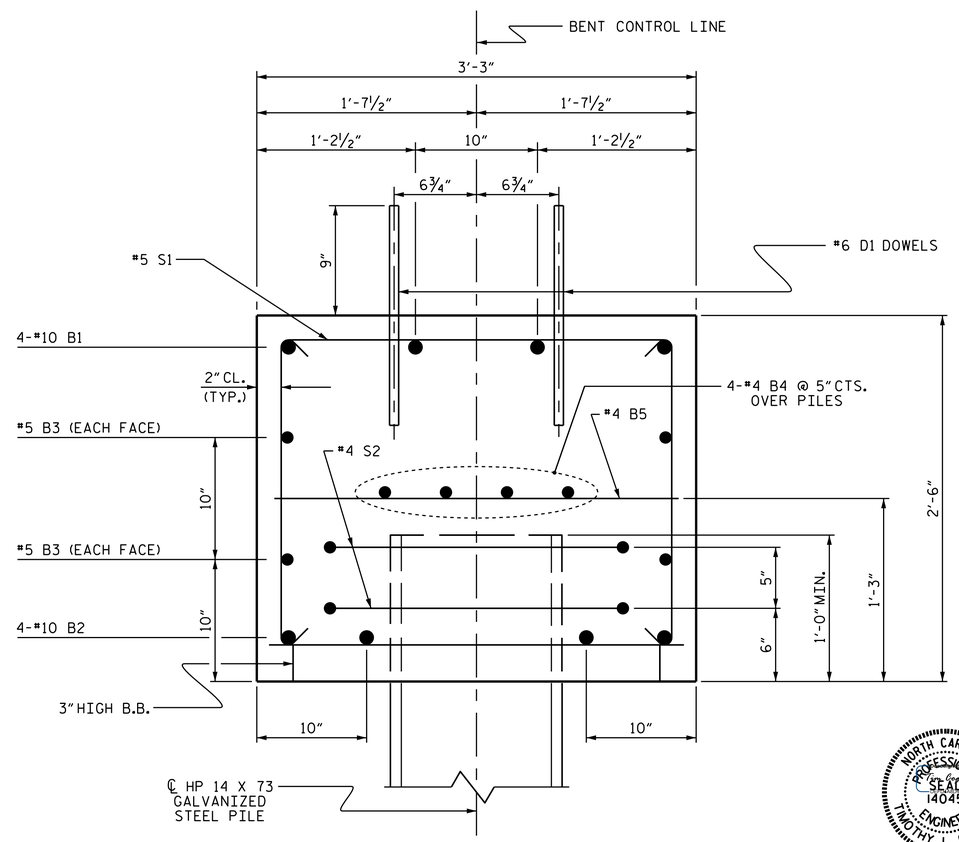

SECTION A-A

NORTH CAROLINA PROFESSIONAL SEAL 14045 ENGINEER TIMOTHY L. COGGINS

PROJECT NO. 17BP.1.R.65
PASQUOTANK COUNTY
STATION: 13+96.00 -L-

SHEET 2 OF 2

STATE OF NORTH CAROLINA
DEPARTMENT OF TRANSPORTATION
RALEIGH

SUBSTRUCTURE

BENT No. 1

REVISIONS						SHEET NO.
NO.	BY:	DATE:	NO.	BY:	DATE:	S-18
1			3			TOTAL SHEETS
2			4			20

DRAWN BY : REZA KOUCHEKI DATE : 11/7/14
CHECKED BY : K.P. SEDAI DATE : 11/19/14

DRAWN BY : DGE 05/10
CHECKED BY : MKT 05/10

09-DEC-2014 12:32
S:\DPGI\Division1\17BP.1.R.65\FinalPlans and SpecialProvisions\DigitSign Setup\400_000_17BP.1.R.65_SD_S0.dgn
nruffin

STD. NO. 14" HP_BT_30_75&105S_<60'