DocuSign Envelope ID: 867BF8B3-42B8-4031-AE84-18C4B520DD81

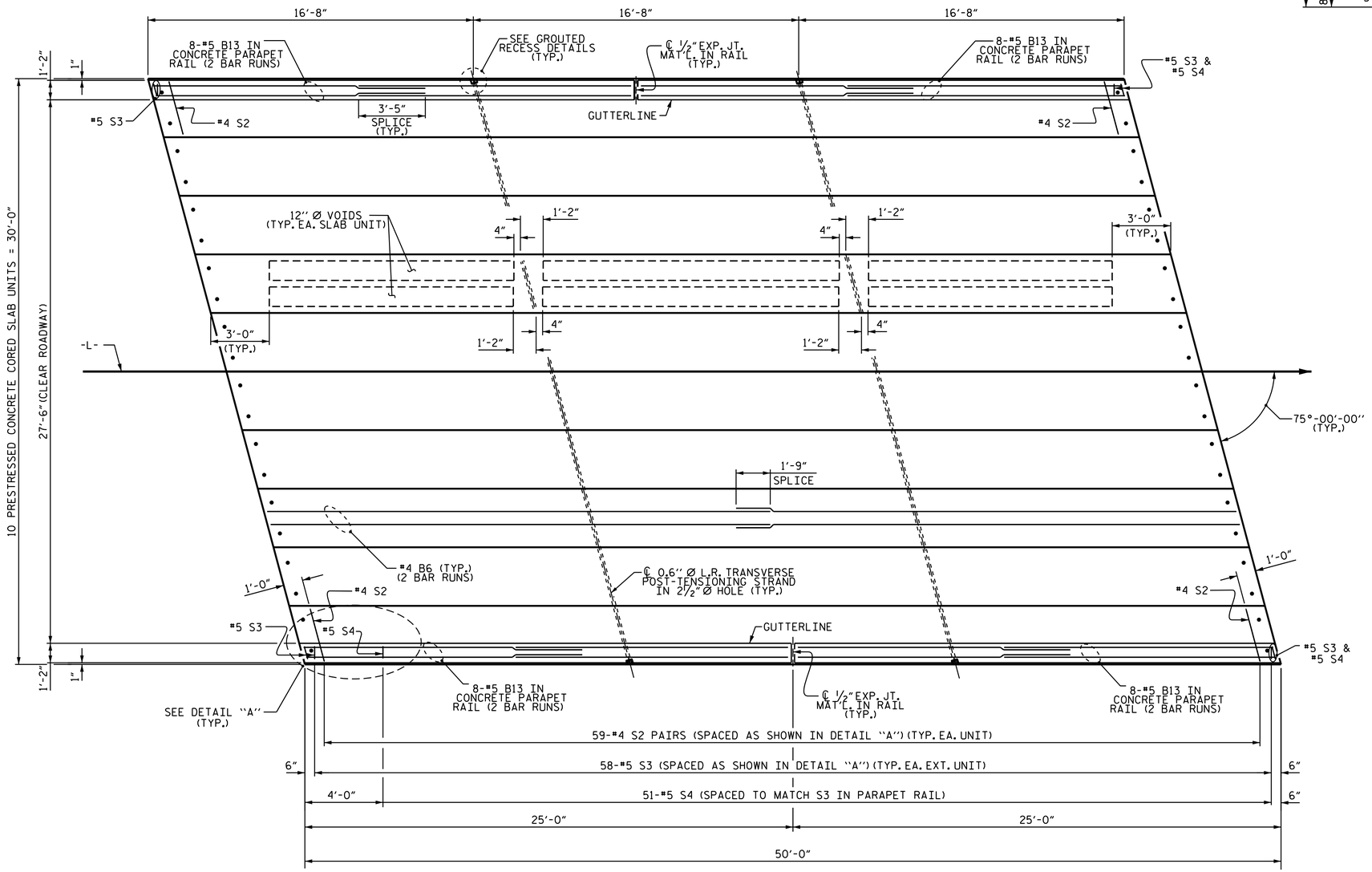

PLAN OF UNIT

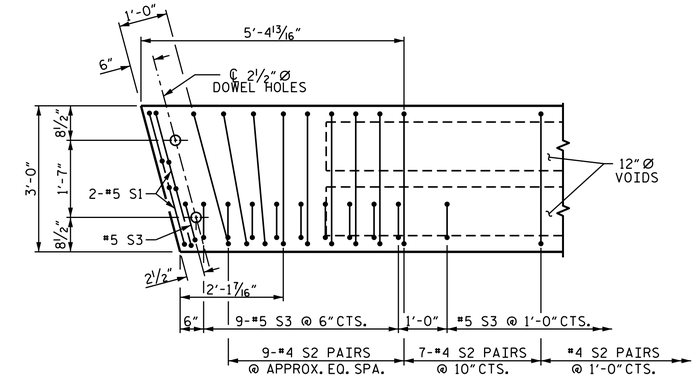

DETAIL "A"

(SIMILAR EACH END OF UNIT)
NOTE: EXTERIOR UNIT SHOWN - INTERIOR UNIT SIMILAR EXCEPT OMIT #5 S3 BARS.

PROJECT NO. 17BP.1.R.65
PASQUOTANK COUNTY
STATION: 13+96.00 -L-

SHEET 2 OF 5

STATE OF NORTH CAROLINA
DEPARTMENT OF TRANSPORTATION
RALEIGH

PLAN OF 50' UNIT
27'-6" CLEAR ROADWAY
75° SKEW

NORTH CAROLINA PROFESSIONAL SEAL 14045 ENGINEER TIMOTHY L. COGGINS

REVISIONS						SHEET NO.
NO.	BY:	DATE:	NO.	BY:	DATE:	S-5
1			3			TOTAL SHEETS
2			4			20

ASSEMBLED BY : REZA KOUCHEKI		DATE : 11/20/14	
CHECKED BY : K.P. SEDAI		DATE : 11/20/14	
DRAWN BY : DGE 5/09	REV. 12/5/11	MAA/AAC	
CHECKED BY: BCH 6/09	REV. 8/14	MAA/TMG	

09-DEC-2014 12:32
S:\DPGI\Division1\17BP.1.R.65\Final Plans and Special Provisions\DigitSign Setup\400_000_17BP.1.R.65_SD_S0.dgn
pruffin

STD. NO. 21" PCS_30_75S_50L