DocuSign Envelope ID: 867BF8B3-42B8-4031-AE84-18C4B520DD81

BAR TYPES

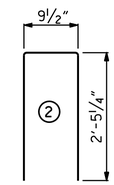

NOTES

ALL REINFORCING STEEL IN CONCRETE PARAPET SHALL BE EPOXY COATED.

GROOVED CONTRACTION JOINTS, ½" IN DEPTH, SHALL BE TOOLED IN ALL EXPOSED FACES OF THE PARAPET AND IN ACCORDANCE WITH ARTICLE 825-10(B) OF THE STANDARD SPECIFICATIONS. A CONTRACTION JOINT SHALL BE LOCATED AT EACH THIRD POINT BETWEEN PARAPET EXPANSION JOINTS. ONLY ONE CONTRACTION JOINT IS REQUIRED AT MIDPOINT OF PARAPET SEGMENTS LESS THAN 20 FEET IN LENGTH AND NO CONTRACTION JOINTS ARE REQUIRED FOR THOSE SEGMENTS LESS THAN 10 FEET IN LENGTH.

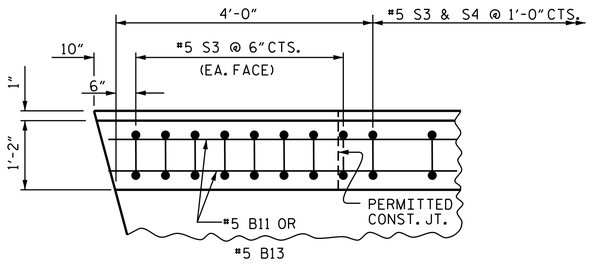

PLAN OF PARAPET

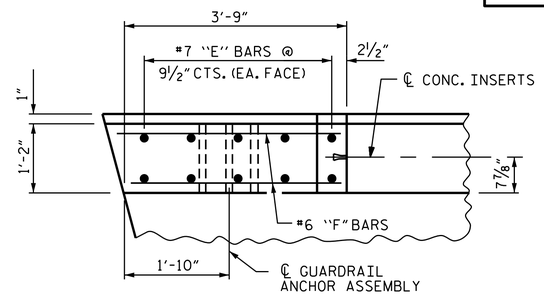

PLAN OF END POST

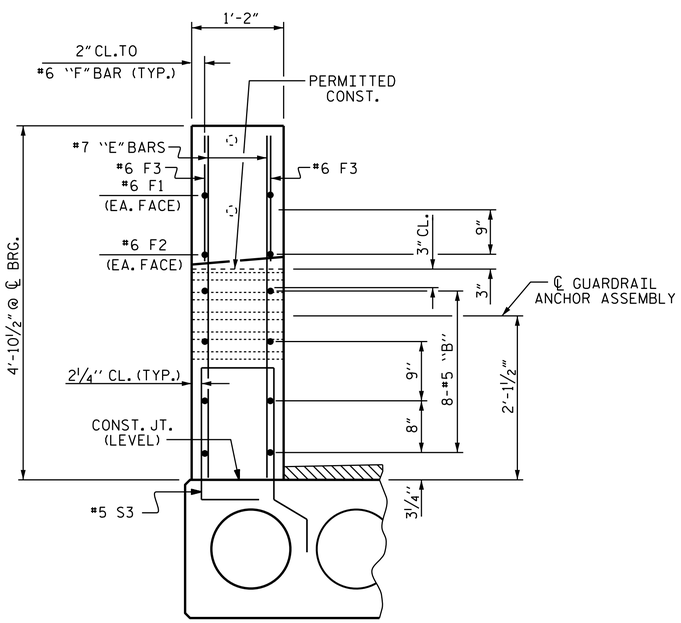

END VIEW

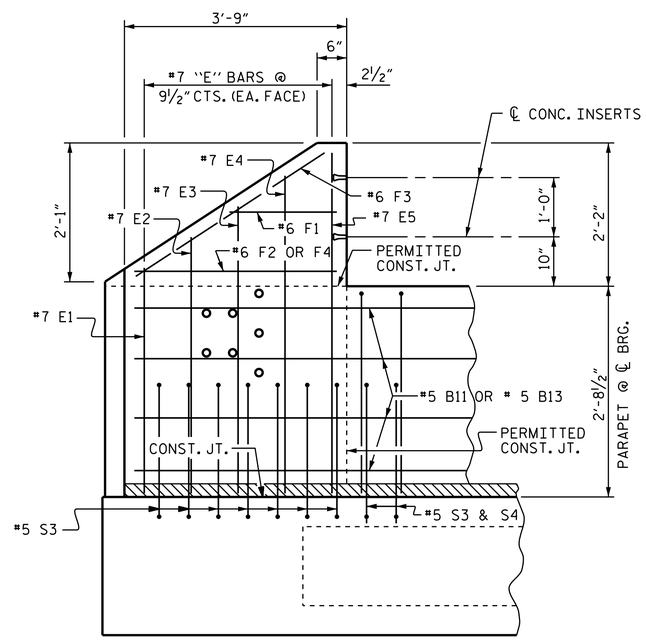

ELEVATION

PARAPET AND END POST FOR TWO BAR RAIL

BILL OF MATERIAL FOR PARAPET & END POSTS

BAR	NO.	SIZE	TYPE	LENGTH	WEIGHT
✳B11	64	# 5	STR	11'-8"	779
✳B13	64	# 5	STR	14'-2"	946
✳E1	8	# 7	STR	2'-8"	44
✳E2	8	# 7	STR	3'-2"	52
✳E3	8	# 7	STR	3'-8"	60
✳E4	8	# 7	STR	4'-2"	68
✳E5	8	# 7	STR	4'-7"	75
✳F1	8	# 6	STR	1'-9"	21
✳F2	4	# 6	STR	3'-3"	20
✳F3	8	# 6	STR	3'-6"	42
✳F4	4	# 6	STR	3'-7"	22
✳S4	182	# 5	2	5'-8"	1076
✳EPOXY COATED REINFORCING STEEL				LBS.	3205
CLASS AA CONCRETE				CU.YDS.	21.6
TOTAL LIN. FT. OF CONCRETE PARAPET					180.26

PROJECT NO. 17BP.1.R.65
PASQUOTANK COUNTY
STATION: 13+96.00 -L-

SHEET 5 OF 5

STATE OF NORTH CAROLINA
DEPARTMENT OF TRANSPORTATION
RALEIGH

CONCRETE PARAPET AND END POST DETAIL

NORTH CAROLINA PROFESSIONAL SEAL 14045 ENGINEER TIMOTHY L. COGGINS

REVISIONS						SHEET NO.
NO.	BY:	DATE:	NO.	BY:	DATE:	S-8
1			3			TOTAL SHEETS
2			4			20

ASSEMBLED BY : REZA KOUCHEKI DATE : 11-20-14
CHECKED BY : K.P. SEDAI DATE : 11-20-14

DRAWN BY : WJH 4/89
CHECKED BY : FCJ 5/89

REV. 10/1/11 MAA/GM
REV. 10/12 MAA/GM
REV. 6/13 MAA/GM

09-DEC-2014 12:32
S:\DPGI\Division1\17BP.1.R.65\Final Plans and Special Provisions\DigitSign Setup\400_000_17BP.1.R.65_SD_S0.dgn
nruffin